| REVISIONS | | | |
|---|---|---|---|
| REV. | DESCRIPTION | DATE | APPROVED |
| A | INITIAL RELEASE | 6/30/15 | AMK |

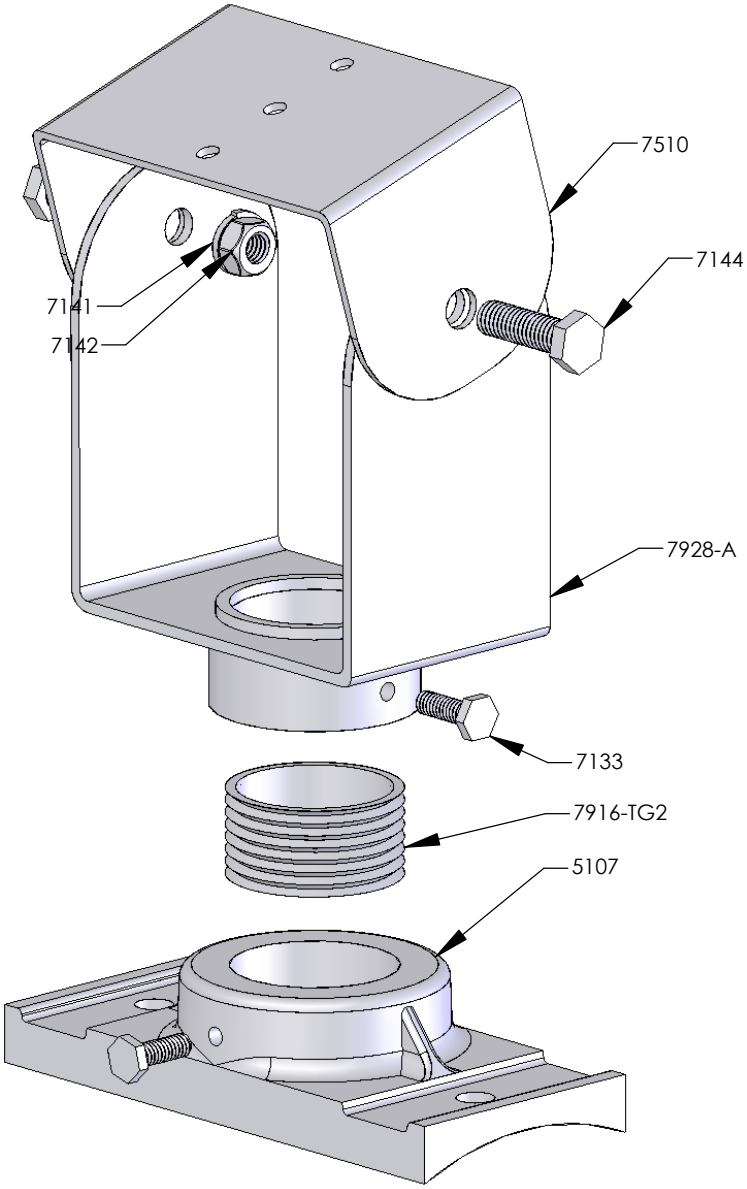


| ITEM | PART DESC. | QTY. |
|---|---|---|
| 7510 | Top Camera Mount, Three Hole, Al 5052 | 1 |
| 7928 | Bottom Flange | 1 |
| 7144 | 3/8"-16 x 1-1/4" Long Hex Cap Screw, SS | 2 |
| 7142 | 3/8"-16 Hex Nut, SS | 2 |
| 7141 | 3/8" Lock Washer, SS | 2 |
| 7133 | 1/4"-20 x 3/4" Hex Head, Cap Screw, SS | 3 |
| 7916-TG2 | Aluminum Pipe, 1 1/2" NPS Nipple, 2" OAL | 1 |
| 5107 | 1915 Side of Pole Round Pole Plate, Al 535 | 1 |

| | NAME | DATE |
|---|---|---|
| DRAWN | AMK | 06/15/15 |
| CHECKED | HRB | 6/17/15 |
| ENG APPR. | | |
| MFG APPR. | | |
| Q.A. | | |

**PROPRIETARY AND CONFIDENTIAL**
THE INFORMATION CONTAINED IN THIS DRAWING IS THE SOLE PROPERTY OF COST CAST, INC. ANY REPRODUCTION IN PART OR AS A WHOLE WITHOUT THE WRITTEN PERMISSION OF COST CAST, INC. IS PROHIBITED.

DIMENSIONS ARE IN INCHES
TOLERANCES:
FRACTIONAL±
ANGULAR: MACH± 1/32"
TWO PLACE DECIMAL ± .03"
THREE PLACE DECIMAL ± .010"

MATERIAL VARIOUS

FINISH VARIOUS

DO NOT SCALE DRAWING

COST CAST, INC.

Title:

# 1328-B

Camera Mount, Side of Pole

SIZE A | DWG. NO. 13860 | REV. A

SCALE:1:10 | WEIGHT: | SHEET 1 OF 1

4 3 2 1