REVISIONS			
REV.	DESCRIPTION	DATE	APPROVED
A	INITIAL RELEASE	8/20/15	HRB
B	NAMING REVISION	10/3/15	HRB

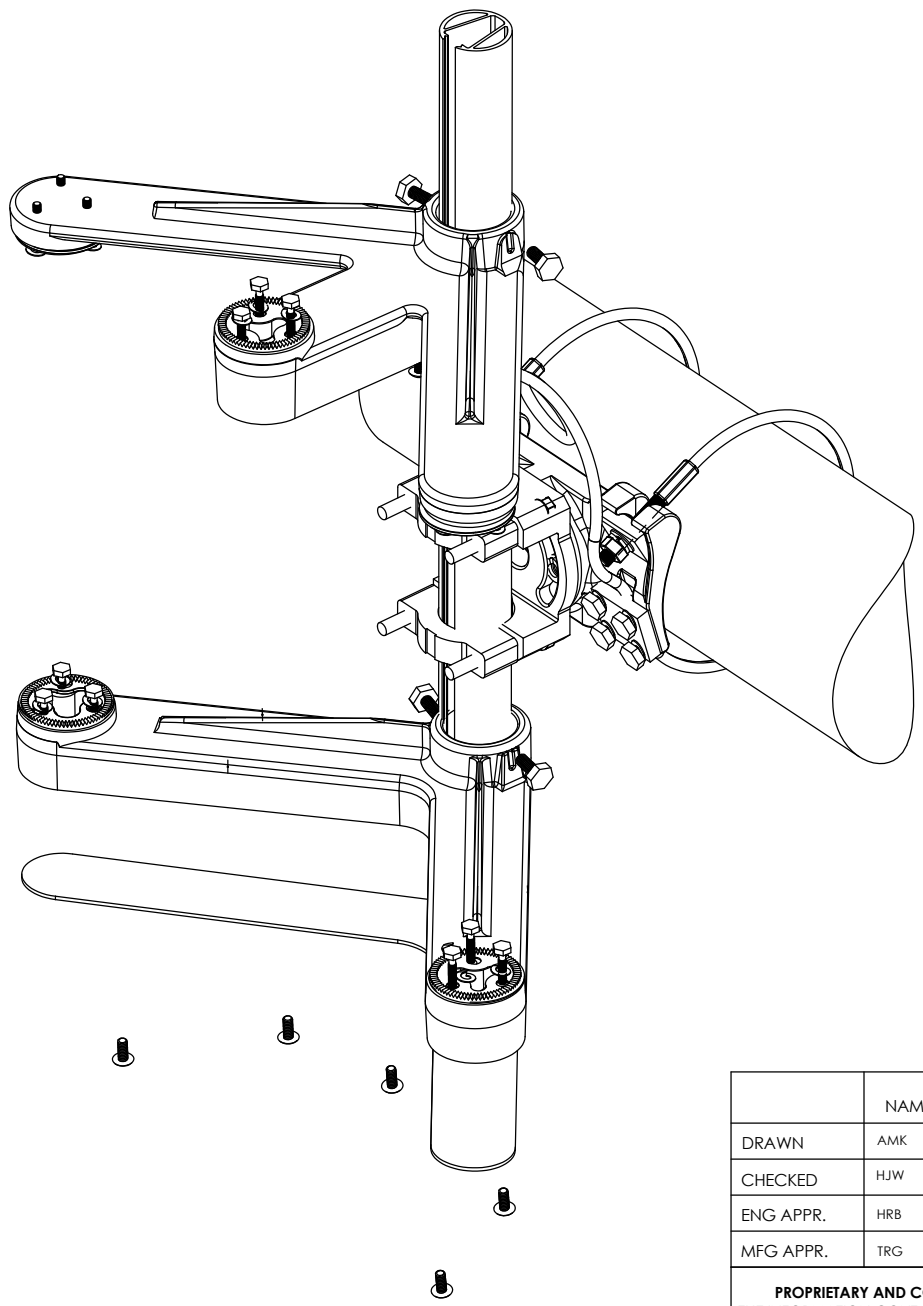

ITEM NO.	PART DESCRIPTION	
1416-A-CXX	***1416 Saddle Swivel Assembly, xx" SS Cable***	1
1946-TACL	***Five Way Cluster Assembly, Tri-Stud***	1
7916-TG37-G	***Gussetted Pipe, 37" Long, Al Alloy 6061-T6***	1

	NAME	DATE
DRAWN	AMK	8/20/15
CHECKED	HJW	8/20/15
ENG APPR.	HRB	8/20/15
MFG APPR.	TRG	8/20/15

PROPRIETARY AND CONFIDENTIAL
THE INFORMATION CONTAINED IN THIS DRAWING IS THE SOLE PROPERTY OF COST CAST, INC. ANY REPRODUCTION IN PART OR AS A WHOLE WITHOUT THE WRITTEN PERMISSION OF COST CAST, INC. IS PROHIBITED.

UNLESS OTHERWISE SPECIFIED:
DIMENSIONS ARE IN INCHES
TOLERANCES:
ANGULAR: MACH± 1/32"
TWO PLACE DECIMAL ± .03"
THREE PLACE DECIMAL ± .010"

INTERPRET GEOMETRIC TOLERANCING PER:

MATERIAL
VARIOUS

FINISH
VARIOUS

DO NOT SCALE DRAWING

COST CAST, INC

TITLE:

1416-G-Cxx-F5

Mast Arm Signal Hanger, 5 Section Cluster Signal, xx" Cable Length, 37" Gussetted" Tube, SS Hardware

SIZE	DWG. NO.	REV
A	13869	B

SCALE: 1:24 WEIGHT: SHEET 1 OF 1

5 4 3 2 1